AQ225E

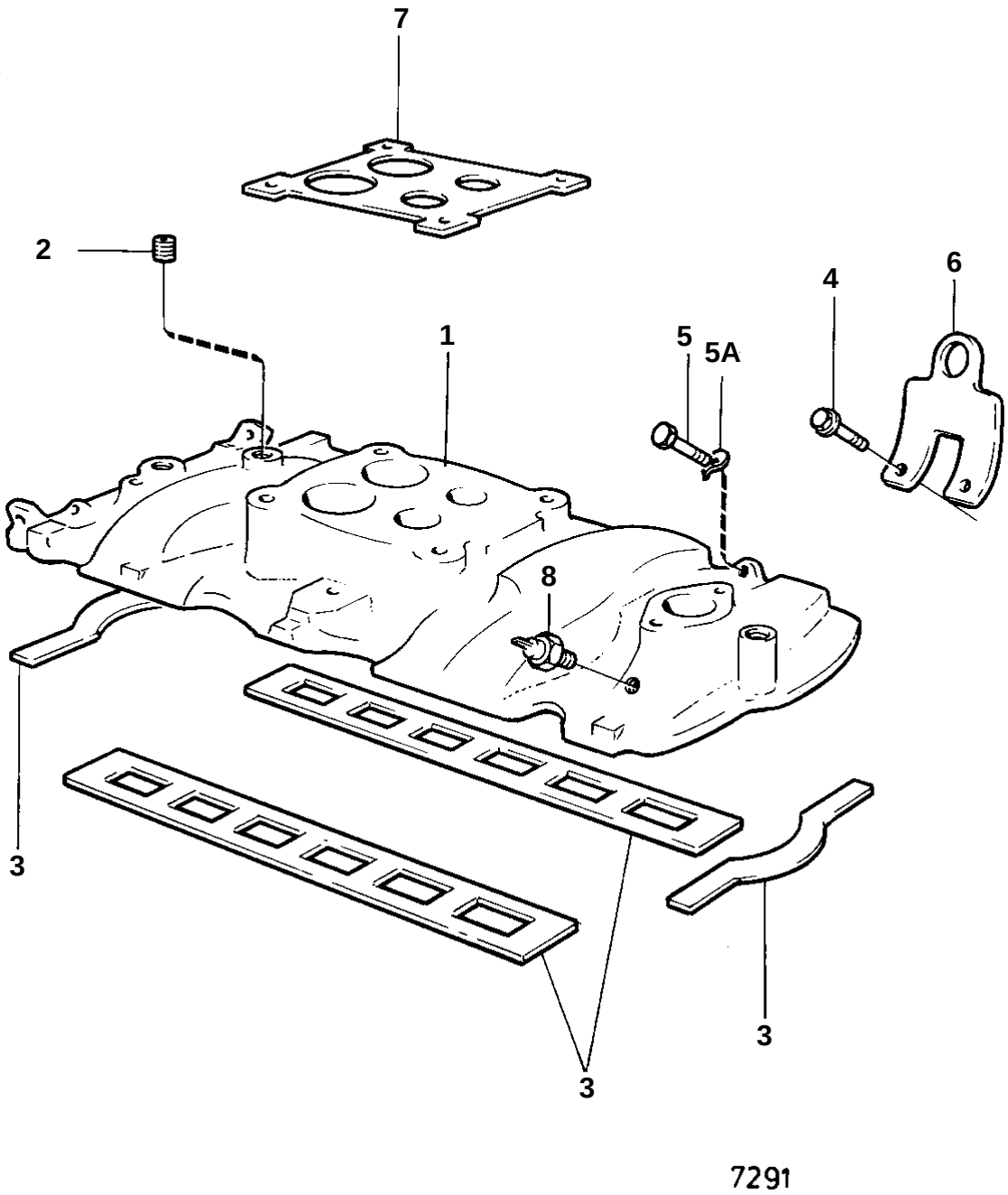

AQ225E

REF	PART NO.	QTY	DESCRIPTION		NOTES
1	835567	1	Inlet pipe		
2	968145	1	Plug		(952357)
3	841720	1	Gasket	IK	
4	855597	3	Screw		MO-56000
	855597	4	Screw		MO56001-
5	955535	9	Screw		MO-56000
	855824	8	Screw		MO56001-
5A	941907	9	Spring washer		
6		1	LIFTING EYE		
7	826479	1	Gasket	IK	SEE GROUP 2C
8	835630	1	Temperature sensor		SEE GROUP 3
	841261	X	Sealant	IK	SEE GROUP 9